RPMV
Rotor Impact Mill

The ball shaper

BHS SONTHOFEN

TRANSFORMING
MATERIALS
INTO VALUE

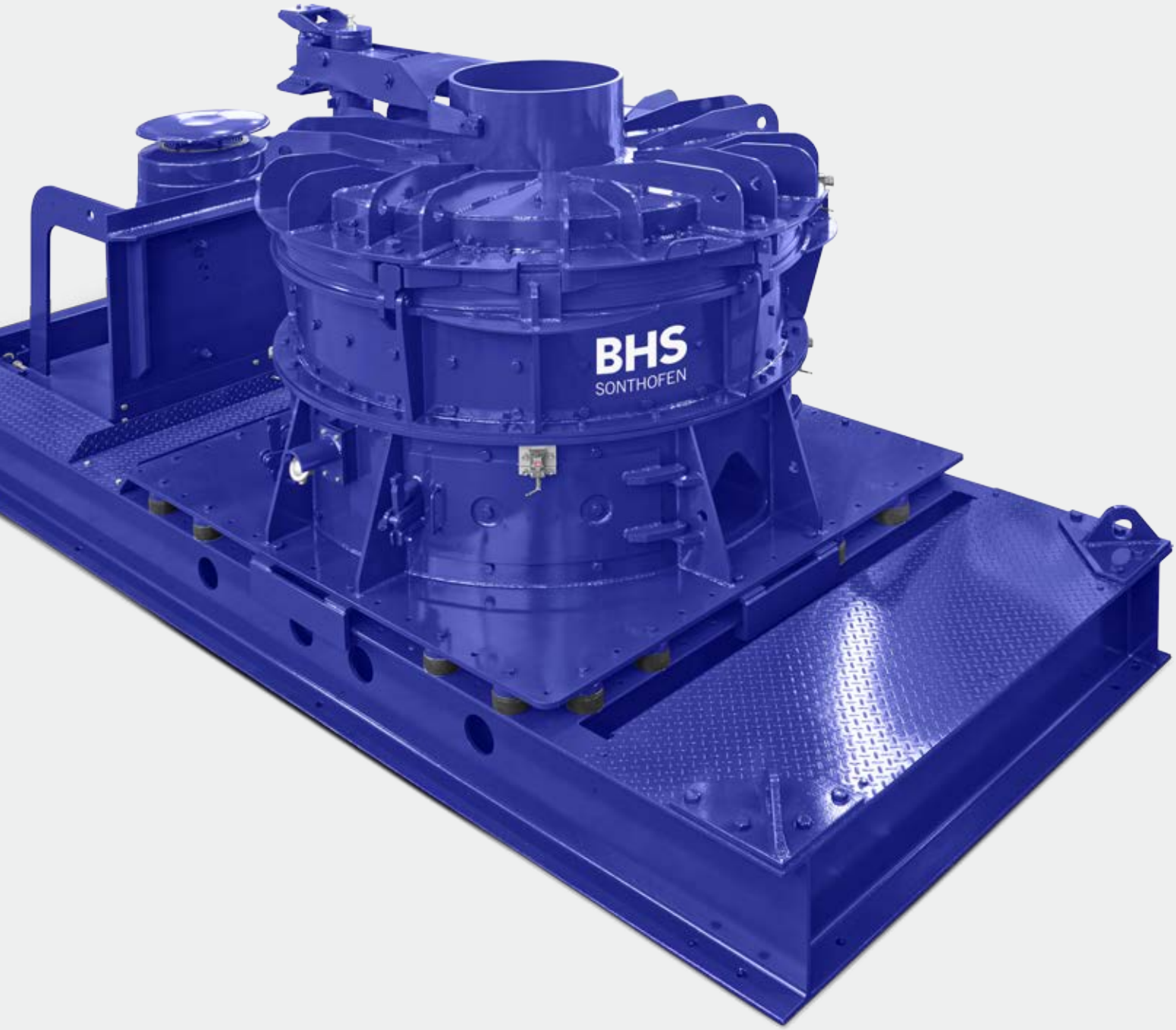

Headquarters of BHS-Sonthofen

TRANSFORMING MATERIALS INTO VALUE

BHS-Sonthofen

We are a mid-sized, owner-operated group of companies with over 300 employees. We are innovative, passionate about technology and place a premium on quality. The group of companies is based in Sonthofen, Germany, and has subsidiaries in the US, China, India and Russia. We are a successful global player in the fields of mixing, crushing, recycling and filtration technology. We provide our customers with well-engineered, state-of-the-art solutions.

Over 100 years of experience in crushing technology

We built our first crushers for the aggregates industry over 100 years ago. In addition to targeted crushing, this market also demands robust, low-wear machinery and low operating costs. Building on this experience, we developed crushing machines for recycling applications in the 1990s. Today, we see ourselves as a technologically innovative problem solver and experienced system supplier for all recycling tasks.

Crushing tests at the BHS technical center

BHS offers customers the opportunity to run production-scale crushing tests with their own specific materials on our machines at the BHS technical center in Sonthofen.

Worldwide service

BHS ensures quick and reliable service worldwide with its technical customer support and a large stock of spare parts for all standard machine types and also for older machines.

---

www.bhs-sonthofen.com

BHS Rotor Impact Mill

The BHS rotor impact mill is a high-performance, vertical-shaft crusher designed for the recycling industry. The unique impeller rotor, combined with the toothed anvil ring, results in intensive stressing of the input material. Composite materials are selectively crushed and separated, entangled materials are singled out and brittle-hard materials undergo intense size reduction. At the same time, metals are shaped into balls and cleaned.

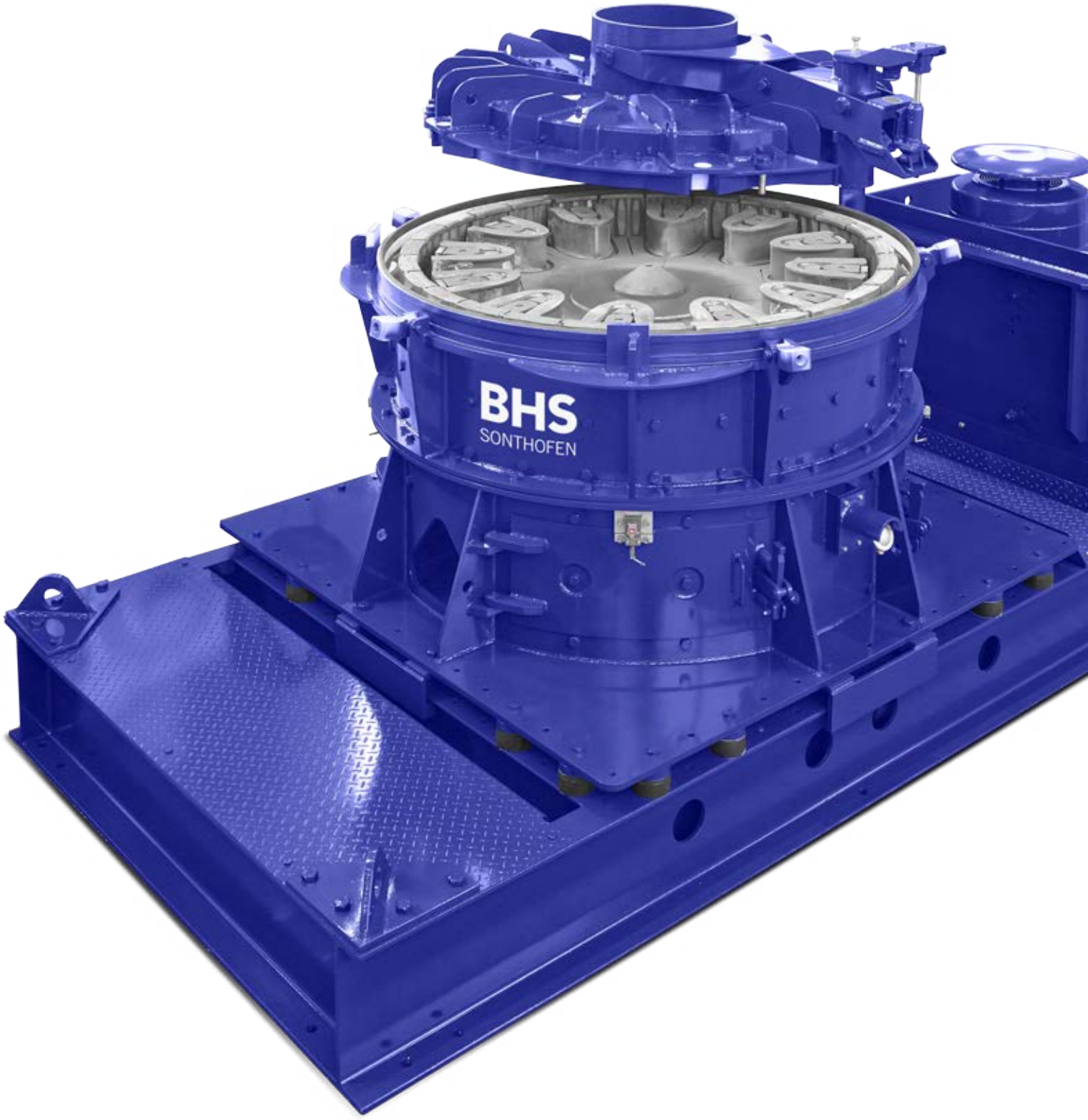

Unique crushing principle

The impeller rotor of the BHS rotor impact mill is unique worldwide. The circumferential speed of the rotor generates centrifugal forces. These result in high energy input into the feed material, that is then intensively processed by means of impact and shear forces imparted by the crushing tools. The rotation results in a near-permanent gap between the tips of the horseshoe-shaped hammers and the anvil ring. As soon as the material is small enough to fit through this gap, it leaves the working chamber.

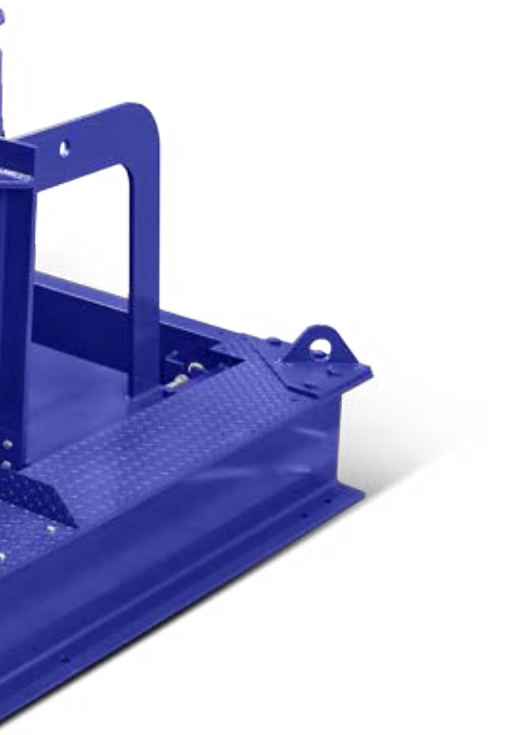

Selective crushing effect

Composite materials in the input material are subjected to selective stress by the impact and shear forces in the rotor impact mill. Composites consisting of materials with different material properties are largely separated from one another.

Ball-shaping of metals

Metal parts in the input material are processed by the crushing tools until they fit through the gap. The multiple stressing of the metals results in them being shaped into balls and cleaned.

Machine adjustment

You can fine-tune this machine to your requirements by adjusting the rotor speed and the annular gap. Conversion is very easy.

Easy maintenance and high availability

All areas of the machine that are subjected to heavy loads are protected by wearing parts that are easy to exchange. The materials of the wearing parts are optimized for the specific application.

Operational unit

The machine and drive train are mounted on a base frame as a unit that is ready for installation. A large cover that can be raised hydraulically and pivoted through 360° allows unimpeded access.

Reliable lubrication

The BHS rotor impact mill is supplied with a recirculating oil lubrication system with cooling and integrated monitoring. This allows low-maintenance and reliable operation.

Vibration absorption

The rubber spring elements between the base frame and the machine absorb vibrations generated during operation and keep them away from the support structure. Excessive vibrations are tracked by an electronic vibration monitor and cause the machine to be shut down.

Layout of the rotor impact mill

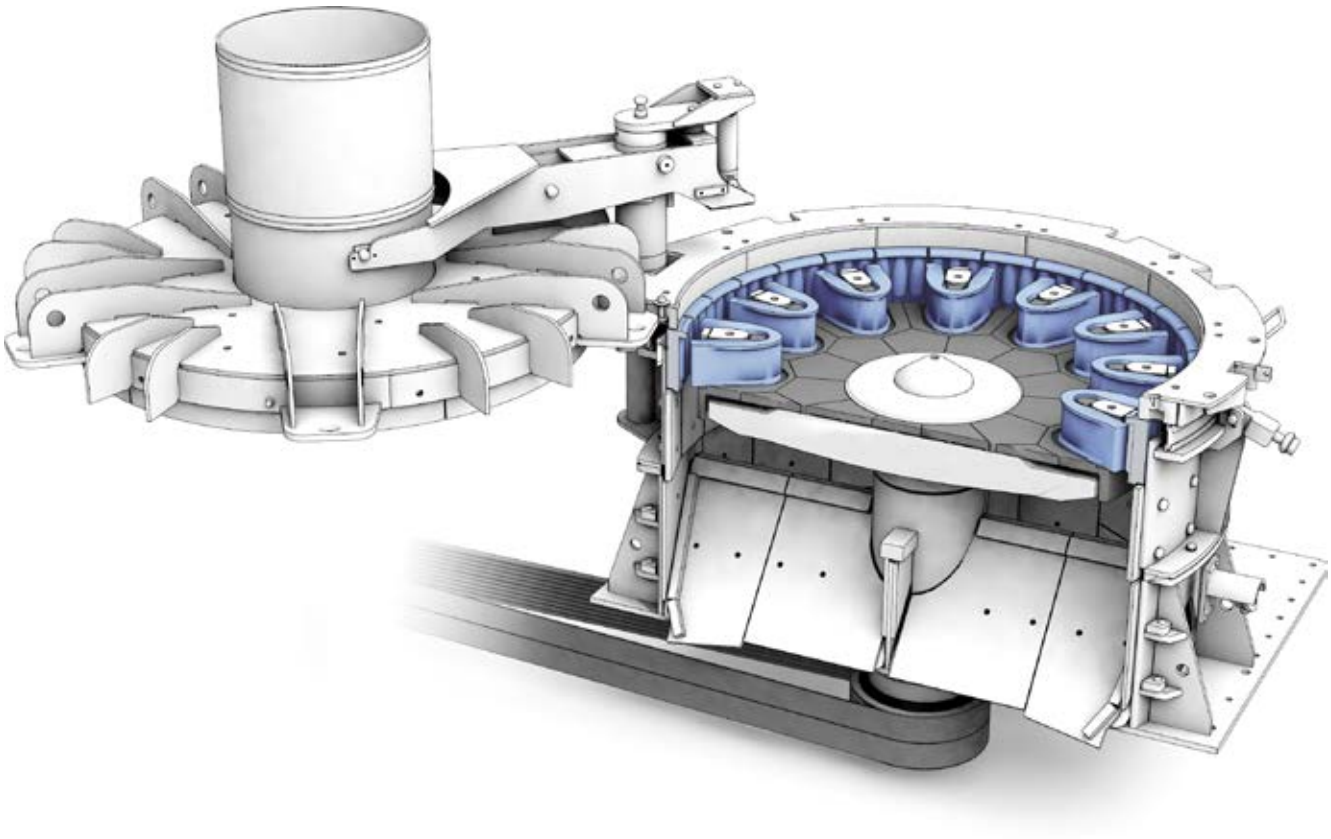

Functional description

The input material is fed into the machine from above through the central feed tube. When it hits the rotor, it is accelerated outward by the centrifugal forces, where it is then caught by the horseshoe-shaped hammers, which impel it against the anvil ring. Here the rock is crushed as a result of the impact and shearing forces. Repelled by the anvil ring, the material hits the hammers again, is further crushed by the impact, and is then thrown back against the anvil ring. This process is repeated several times, resulting in intensive and selective stressing of the input material and ball-shaping of metals.

The material leaves the rotor through the gap between the rotor and the anvil ring and falls out through the two discharge ducts. The crushing result is determined by the gap size between hammer and anvil ring, the characteristics of the input material, and the circumferential speed of the rotor. This makes it possible to optimize the results in each individual case.

Design of the rotor

Exchangeability of the crushing tools

The anvil ring elements are attached to the mill housing. The horseshoe-shaped impact hammers are seated on the rotor and are held on the rotor journal by centrifugal force. Both the anvil ring and the impact hammers can be easily exchanged without tools.

Adjustability of the gap

A set of exchangeable spacers is provided for adjusting the annular gap. As the wear of the impact hammers increases, the gap width can be readjusted simply by exchanging spacers of different sizes (shown red in the graphic).

Optimization of the service life

The rotor is reversible, thereby enabling both sides of the impact hammers to be fully utilized.

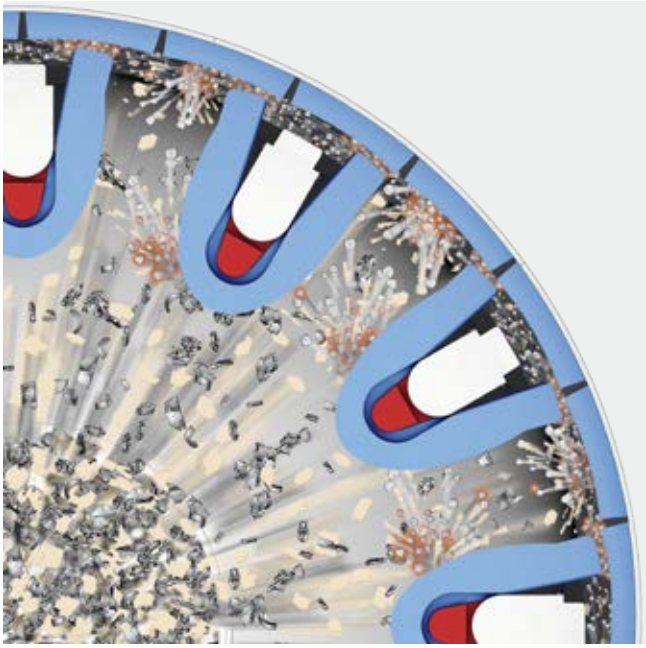

Functional principle (overhead view)

Spacers with increasing degrees of wear

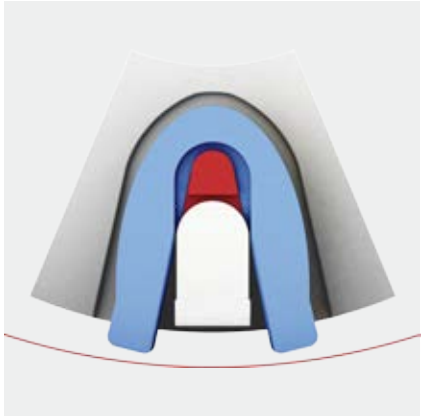

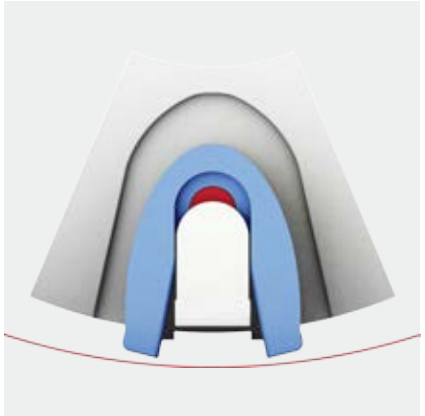

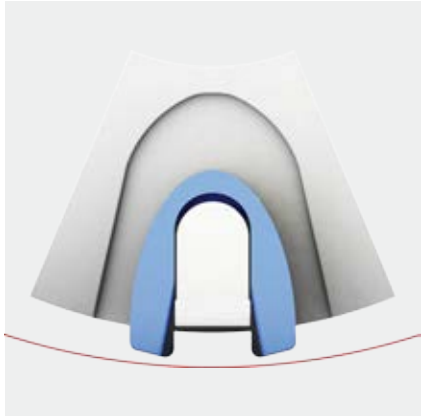

Exchange of wearing parts

Applications

Separation of metal composites

Separation of metal composites and pre-crushed ferrous and non-ferrous metals, such as cans, window profiles, shredded electronic scrap and shredder heavy fractions

Ball-shaping of ductile metals

Cleaning and ball-shaping of ductile metals

Crushing of brittle-hard materials

Crushing of brittle-hard materials and their separation from composites, e.g. remnants of glass on window profiles, ceramic remnants on metal parts

Disaggregation of electrical and electronic waste (WEEE)

Disaggregation of composites in electrical components, such as printed circuit boards with or without components, switches, connectors or other plastic-metal composites

Separation of plastic composites

Separation of composites of hard and soft plastics

Slag treatment

Treatment of waste incineration, foundry and steel mill slags, saltcake and dross in order to separate and clean the metals

Separation of shredder fractions

Separation of tangled materials, such as shredder light fractions

Application examples

Ball-shaped aluminum

Mixed metal fraction

Ball-shaped copper

Plastic fraction from WEEE

Electro-hydraulic cover opening

For fast opening of the machine cover for maintenance and inspection, an optional electro-hydraulic actuation mechanism is available.

Electrical terminal box

All the cabling can be connected to a terminal box for easier installation.

Intensive cooling

In the case of high ambient temperatures or high temperatures of the input material, a lubricating oil system with increased storage volume and cooling performance can be provided.

Air cannon

To reduce caking in the discharge area, the mill can be equipped with air cannons if required.

Control system

As an alternative to integration in the system controller, the machine can be supplied with a PLC (including touch panel) and, if required, with a frequency converter to ensure self-sufficient operation and monitoring of the machine functions. Additional plant components can be integrated into the machine controller, such as feed and discharge systems, dust removal, sorting units etc.

Steel construction

In addition to the actual machine, we also offer standard solutions for the steel construction – consisting of supports, platform, handrail, steps – and customized solutions.

Plant technology

We can also provide complete system solutions, consisting, for example, of: steel construction, storage bunker and metering equipment, feed and discharge equipment, classifying and sorting equipment, and dust capture systems. The plant technology is engineered in accordance with your specific requirements.

Fine treatment of shredder residue fractions with RPMV 1513

Tests give certainty

We operate an all-weather, industrial-sized treatment plant on our premises in Sonthofen. All our crushing machines are installed in this facility. The crushed material can be separated into different categories using a sieve or overbelt magnet.

We can perform crushing tests using your input material with this plant. A variety of machine parameters can be tested. A box feeder is available for large material quantities.

All test results are recorded, documented and analyzed according to mutually agreed criteria.

BHS technical center in Sonthofen for customer-specific testing

Performance data

Type	Rotor diameter x height	Number of hammers	Circumferential speed (max.)	Drive power (max.)
RPMV 0813	850 x 135 mm	6	65 m/s	75 kW
RPMV 1113	1,150 x 135 mm	8	70 m/s	132 kW
RPMV 1513	1,500 x 135 mm	12	70 m/s	200 kW

Dimensions and weights

Type	A	B	C	D	E	F	Weight [1]
RPMV 0813	2,800 mm / 3,100 mm [2]	1,270 mm	1,975 mm	219 mm	770 mm	2 x 210 mm	4,400 kg
RPMV 1113	4,600 mm	2,000 mm	2,700 mm	406 mm	1,300 mm	2 x 510 mm	7,700 kg
RPMV 1513	4,900 mm	2,120 mm	2,740 mm	610 mm	1,540 mm	2 x 510 mm	12,000 kg

[1] Weight for standard design without motor and accessories.
[2] Depending on the drive power.

All specifications apply to the standard design.
Technical data for customized designs may differ from the specified data.
All technical data may change due to development.
Subject to modification without notice.

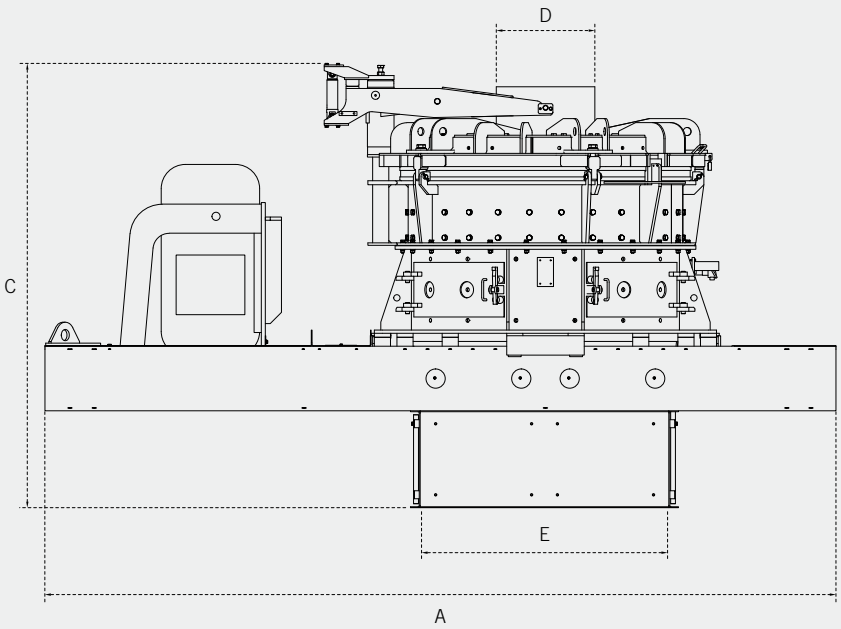

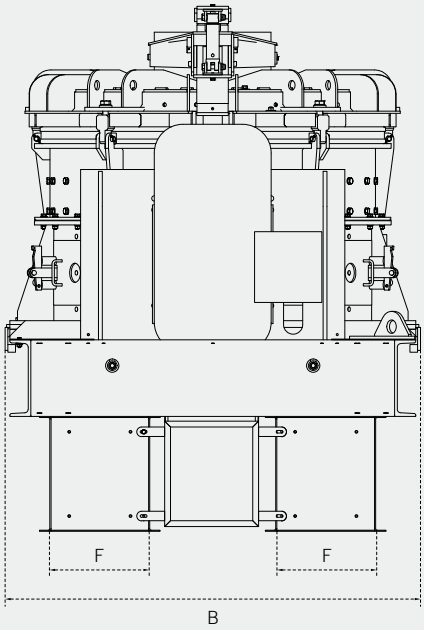

BHS FIELDS OF COMPETENCE

MIXING TECHNOLOGY

CRUSHING TECHNOLOGY

RECYCLING TECHNOLOGY

FILTRATION TECHNOLOGY

Germany
BHS-Sonthofen GmbH
An der Eisenschmelze 47
87527 Sonthofen
Phone +49 8321 6099-0
Fax +49 8321 6099-220
info@bhs-sonthofen.de

USA
BHS-Sonthofen Inc.
14300 South Lakes Drive
Charlotte, N.C. 28273
Phone +1 704 8451190
Fax +1 704 8451902
info@bhs-sonthofen.com

China
BHS-Sonthofen (Tianjin)
Machinery Co., Ltd.
Laiyuan Road 3
Wuqing Development Zone
Tianjin 301700
Phone +86 22 82126263
Fax +86 22 82107095
info@bhs-sonthofen.cn

India
BHS-Sonthofen (India)
Pvt. Ltd.
6-3-252/1/7/B
3rd floor, Opp. IIPM
Erramanzil / Banjara Hills
Hyderabad 500034
Phone +91 40 23315341
info@bhs-sonthofen.in

Russia
BHS-Sonthofen
Prishvina St. 8
Bldg. 2, office 404
127549 Moscow
Phone +7 499 9404808
Fax +7 499 9404898
info@bhs-sonthofen.ru

www.bhs-sonthofen.com

07.2014_801000134_EN